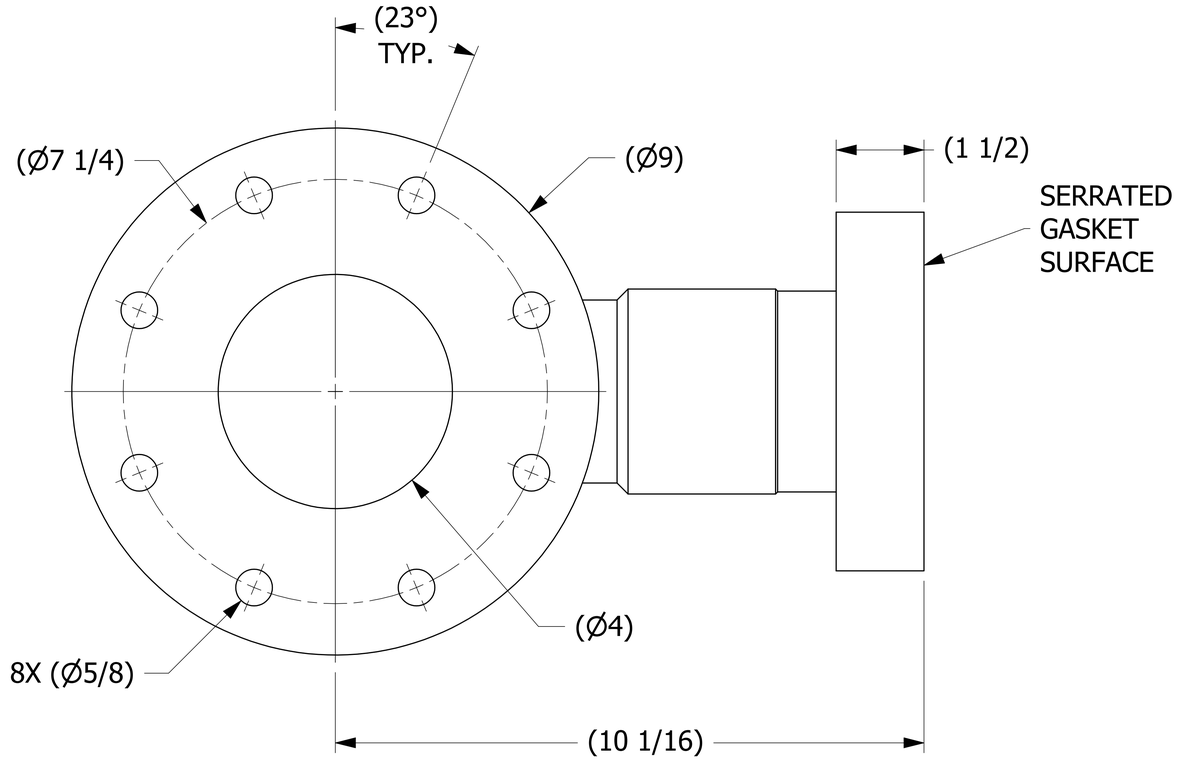

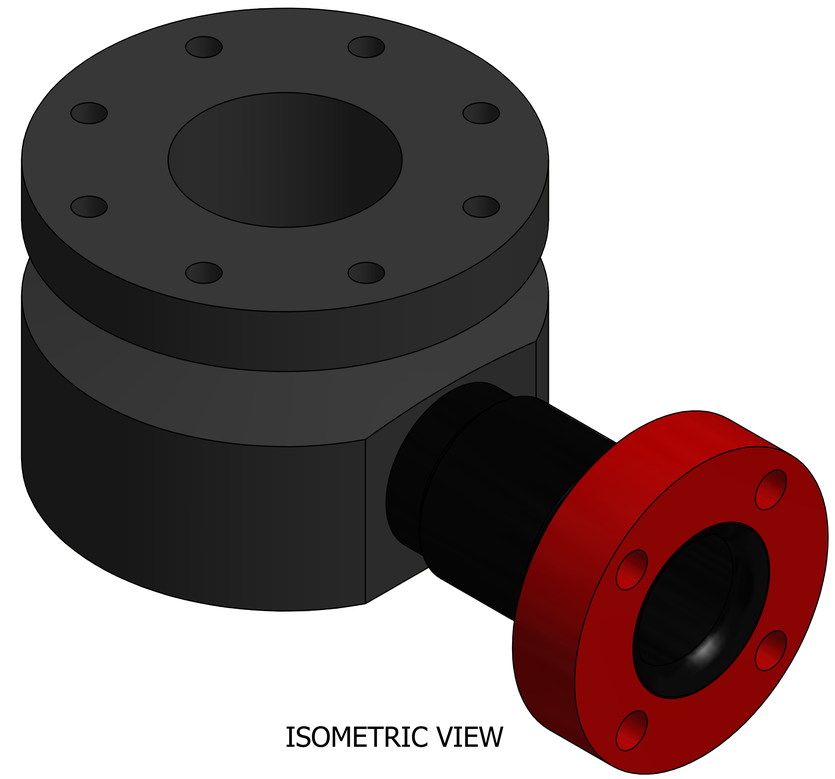

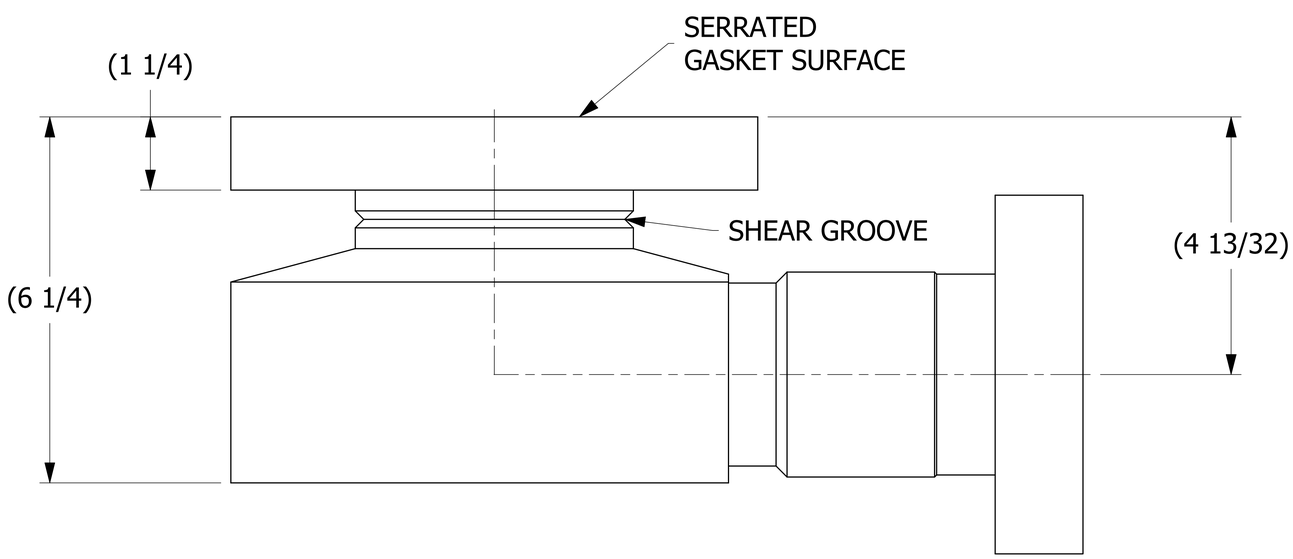

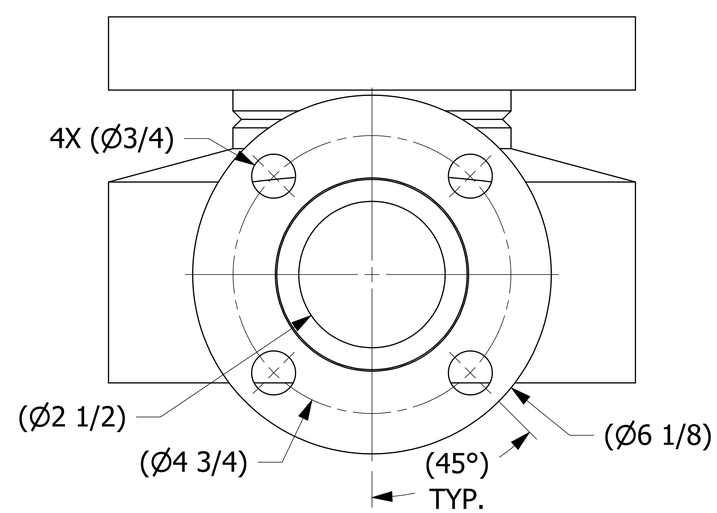

SALES DRAWING SALES DRAWING

SALES DRAWING SALES DRAWING

REV	BY	DATE	DESCRIPTION
B	GS	2-18-13	UPDATED TITLE BLOCK, NOTES, & LEADER NOTES
A	BG	11/19/12	NEW PART ADDED TO THE NETWORK

UNLESS OTHERWISE SPECIFIED
DIMENSIONAL TOLERANCES
FRACTIONAL: ±1/16
X.XX: ±.03
X.XXX: ±.015
ANGULAR: ±1°
DEBURR ALL SHARP EDGES.
ALL MACHINED SURFACES TO HAVE A 125 RMS FINISH UNLESS NOTED OTHERWISE.
THIRD ANGLE PROJECTION

DRAWN BY:	GDS
CHECKED BY:	WRB
PROTOTYPE BY:	GDS
PROTOTYPE DATE:	10/11/2012
APPROVED FOR PRODUCTION BY:	WRB
PRODUCTION DATE:	11/19/2012

SALCO PRODUCTS, INC.

PART NAME: PIPE ELBOW 4"X2"X90°

MATERIAL: SALCO PE

PROJECT #: 1210101 | SHEET #: 1 OF 1 | SCALE: 1:1

DRAWING #: E34335 | PART #: HS4X2X90PE4SG

THIS PRINT, PROPERTY OF SALCO PRODUCTS INC, CONTAINS PROPRIETARY INFORMATION AND MUST NOT BE COPIED, REPRODUCED, OR USED DETRIMENTALLY TO OUR INTEREST.